WHITE PAPER

Implementing Texas Instruments power supplies for a Teledyne e2v DDR4 memory in Space applications.

Feb 2023

TELEDYNE e2v | Semiconductors
Everywhereyoulook™

ABSTRACT

Edge computing applications in Space, such as image/video processing, Artificial Intelligence (AI), telecommunications, rely on compute intensive devices like processors, FPGAs, and ACAPs to perform the heavy calculations. These devices feature limited internal memory and typically require external high-speed and high-density DDR4 memory to support the compute intensive use cases.

Teledyne e2v has been the first manufacturer to provide a radiation tolerant Space grade DDR4 (DDR4TxxG72). Initially offered in a 4GB density, Teledyne e2v has then expanded its portfolio with higher densities, including 8GB, to cover the constantly increasing computational and storage needs of the Space use cases.

DDR4 memories have specific power supply requirements and in particular a termination voltage (VTT) regulator, which serves to control the voltage on the termination resistors of the Address Control Command (ACC) bus. This voltage needs to be accurately regulated at a high bandwidth considering the high frequencies involved in the DDR4 bus transactions, which go above 1GHz. On top of this, the memories also require other voltage regulators for supplying the logic parts of the components. Texas instruments (TI) offers a range of Space grade power supply ICs, which meet the requirements of supplying a Teledyne e2v DDR4 memory in a Space radiative environment.

This white paper first provides a general description of the Teledyne e2v DDR4 memories and associated Texas Instruments termination voltage regulator. Then, the implementation of a DDR4 memory with power supplies is proposed and described.

TELEDYNE E2V DDR4 DDR4TxxG72 DESCRIPTION

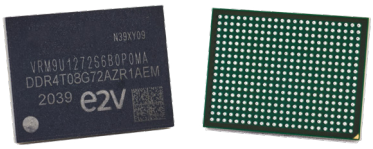

Figure 1: Radiation Tolerant 4GB DDR4 memory DDR4T04G72 from Teledyne e2v.

The DDR4TxxG72 DDR4 memory from Teledyne e2v is the ideal companion-chip for Space grade processing devices such as processors, FPGAs, ... This 4/8GB Radiation Tolerant DDR4 Memory Multi-Chip Package (MCP) is a Ultra High Density Memory Solution, targeting Space Embedded Systems & Applications.

This space-grade DDR4 memory enables elevated levels of performance, while taking up minimal board real estate – something that is certain to be of value in highly space-constrained, densely-packed satellite designs. It can be used in conjunction with processors and FPGAs having a DDR4 controller, and is also available embedded on Teledyne e2v Space version of Qormino® Common Compute Platform together with a Space version of LS1046 quad-core processor (QLS1046-4GB).

Key features of the DDR4TxxG72:

- 4GB and 8GB densities
- 72 bits bus width - (typically used as 64 bits data + 8 bits ECC, offering single-bit error correction, and dual-bit error detection)
- Up to 2.4GT/s (150Gbps) data rates
- Organic package 15mm x 20mm x 1.92mm
- Temperature range [-40 ; +105]°C or [-55 ; +125]°C

Radiation performance and quality levels:

- Up to NASA Level 1 (based on NASA EEE-INST-002 – Section M4 – PEMs)
- Up to ECSS Class 1 (ECSS-Q-ST-60-13C)
- SEL LET Threshold > 60.88 MeV.cm^2/mg
- SEU/SEFI data > 60.88 MeV.cm^2/mg
- TID capability 100 krad(Si)

TEXAS INSTRUMENTS DDR4 SPECIFIC POWER SUPPLIES

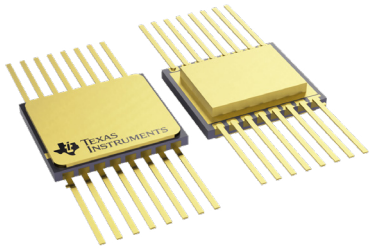

Figure 2: TPS7H3301-SP voltage termination (VTT) regulator.

Texas instruments has a portfolio of power supply ICs for Space, among which the TPS7H3301-SP (Figure 2), a radiation hardened QML-V ±3 A source-sink DDR termination regulator with built-in VREF. It is a linear solution that reduces overall solution area as there is no inductor nor compensation needed and it requires only few passives for operation (Figure 3). This VTT regulator meets the JEDEC specifications for DDR4, which makes it a good solution for Teledyne e2v DDR4 memories.

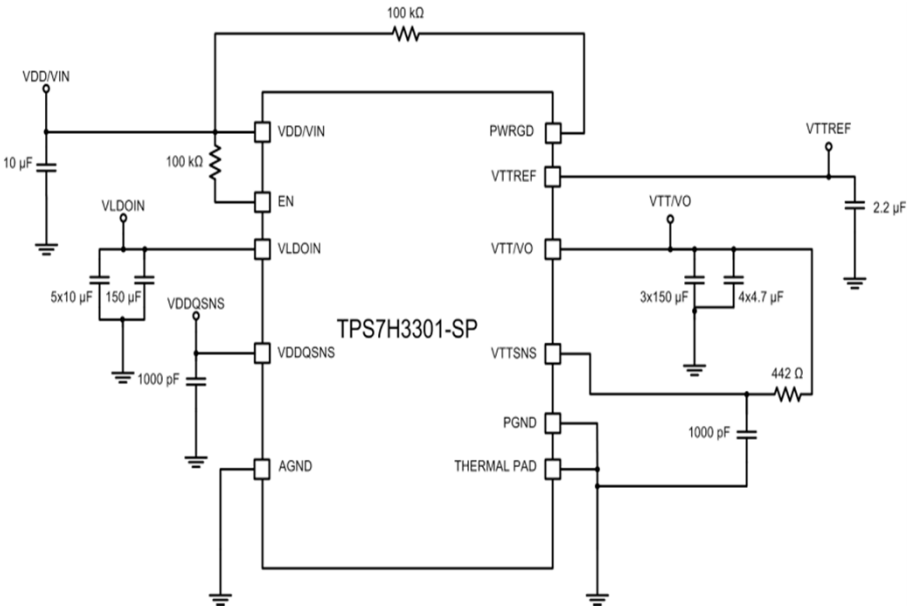

Figure 3: Typical TPS7H3301-SP implementation.

Key features of the TPS7H3301-SP:

- Radiation: HDR & LDR TID 100-krad(Si), SET/SEFI characterized and SEL/SEB/SEGR immune up to 70 MeV.cm2/mg
- Control Input Voltage: 2.5 V and 3.3 V
- VLDO input down to 0.8 V
- Power Good and ENABLE
- 10 mA Buffered VTTREF
- Source/Sink VTT voltage output with droop compensation
- Thermally Enhanced 16 pins CDFP, 9.9 x 11.3 mm
- [-55 ; +125]°C temperature range

There also exists a radiation tolerant version TPS7H330**2-SEP**, which exhibits similar functionality as the TPS7H330**1-SP** in a plastic package, with a lower quality level and radiation performance for less demanding Space applications.

Apart from the termination voltage, the Teledyne e2v DDR4 memories also need some additional supply rails, which can also be built from other Texas Instruments ICs, as described in power supply implementation in the next section.

POWER SUPPLY IMPLEMENTATION WITH DDR4

The DDR4 memories from Teledyne e2v require three different supply voltages to operate (VTT, VDD, VPP), and a voltage reference (VREFCA). The typical requirements for these supplies are listed below:

- VDD is the main supply for the logic part of the DDR4 and has a value of 1.2V. In terms of current requirements, 1-2A are expected to supply one DDR4, depending on density and usage (a power estimation spreadsheet is available from Teledyne e2v to evaluate power consumption). In addition, the 1.2V supply is usually required by the DDR4 controller of the supervisor, which will also consume some current. This has to be taken into account in the supply sizing.

- VPP is the auxiliary supply for the DDR4 with a voltage of 2.5V, on which the DC current is expected to remain in the 100mA range or below. A switching or linear converter can be used.

- VTT is the termination voltage that is internally connected to the integrated termination resistors of the Teledyne e2v DDR4 memory, and it should track VDD/2, i.e. 0.6V. In the worst case, the instantaneous current requirement stays below ±1A, and the supply must have sink/source capability. It must be accurately regulated to avoid errors during the read and write cycles of the DDR4. The bandwidth of the voltage regulation is also important since the perturbations occur at the DDR4 clock frequency, which is in the GHz range. For these reasons a linear regulation is preferred.

- VREFCA is a critical voltage reference for the ACC signals, that should track VDD/2, i.e. 0.6V value. It has to be very stable and accurate, meaning it is not recommended to tie it directly to VTT which can endure fluctuations when the ACC signals are switching.

Based on the previous requirements for power supplies, a radiation-hardened supply scheme with TI devices is proposed on the Figure 4. The power sequencing is implemented by using the power-good and enable pins of the devices to ensure that the VDD (1.2V) rises after VPP (2.5V).

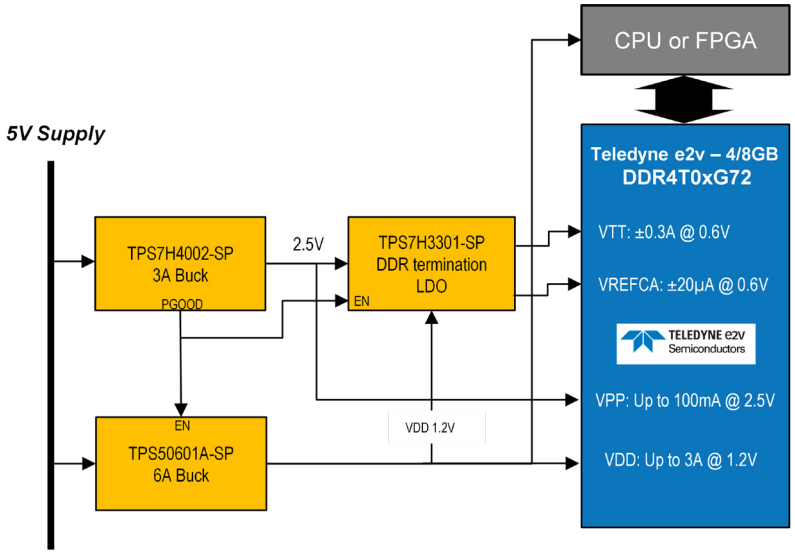

Figure 4: TI-based radiation-hardened power supply implementation for Teledyne e2v DDR4.

The power supply scheme builds the different rails from a main 5V supply. For the VDD supply, a TPS50601-SP buck converter is used, offering a 6A output current capability. This covers both the current needed for the DDR4 memory and the DDR4 controller of the supervisor (processor, FPGA,...). A TPS7H4002-SP buck converters generates the 2.5V for VPP. The TPS7H3301-SP regulates VTT and has a dedicated output to provide the VREFCA reference avoiding the use of extra components. For applications having lower quality or radiation requirements, a configuration with radiation tolerant power ICs can be considered using the same scheme. In this case, a TPS7H4010-SEP replaces TPS7H4002-SP / TPS50601-SP, and a TPS7H3302-SEP replaces the TPS7H3301-SP.

An estimation of the PCB area required for both the radiation hardened and radiation tolerant implementations is given on the Figure 5. The example taken is with a AMD/XILINX VERSAL supervisor as a reference for the scale, but the area for the supplies and DDR4 will be the same with other devices. As can be seen, the use of the radiation tolerant option significantly reduces the area requirement.

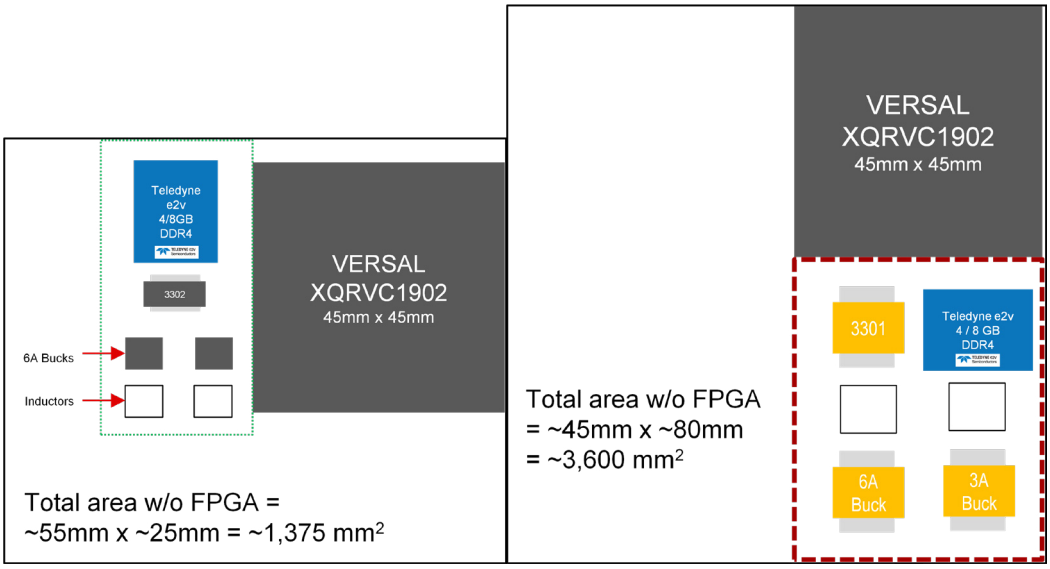

Figure 5: Board area estimate with radiation tolerant devices [left], and radiation hardened devices [right].

SUMMARY

This white paper has proposed a complete Space implementation for a Teledyne e2v DDR4 memory with TI power supply ICs. With the DDR4TxxG72/TPS7H3301-SP solution, Space systems have now access to a small-format configuration that saves critical board area and offers high power density and verified radiation hardness and reliability. This radiation-validated TI and Teledyne e2v devices that make up this solution are featured both on the QLS1046-Space reference design kit and Alpha Data's Versal Core development kit ADK-VA600.

For further information, you may check the following links:

- ti.com/space
- Space Radiation Tolerant 4GB/8GB DDR4

TELEDYNE e2v
Semiconductors

For further information, please contact:

Thomas Guillemain,
Marketing & Business Development,
Data Processing Solutions
thomas.guillemain@teledyne.com

TELEDYNE e2v
Semiconductors

For further information, please contact:

Thomas Porchez,
Application Support,
Data Processing Solutions
thomas.porchez@teledyne.com